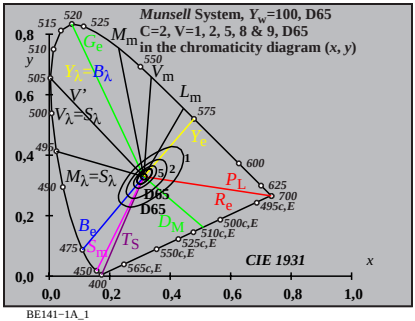

BE141−1A_1

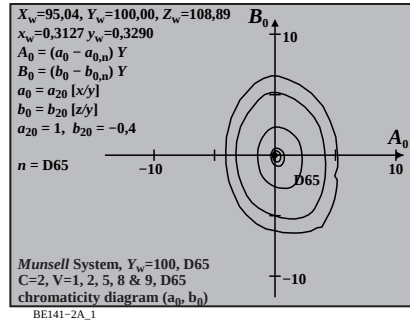

BE141−2A_1

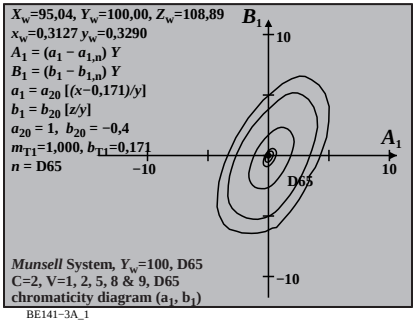

BE141−3A_1

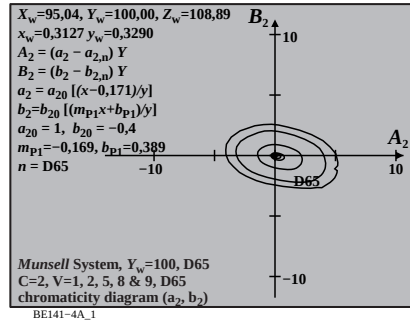

BE141−4A_1

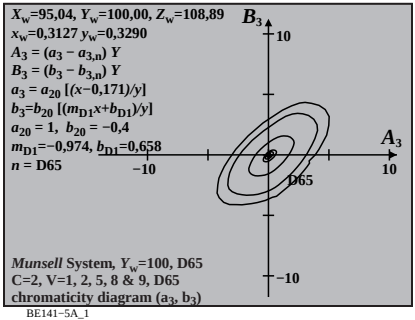

BE141−5A_1

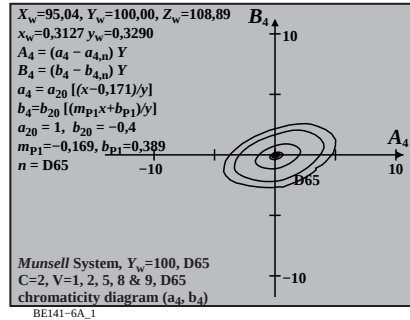

BE141−6A_1

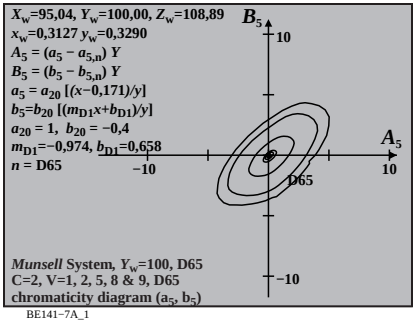

BE141−7A_1

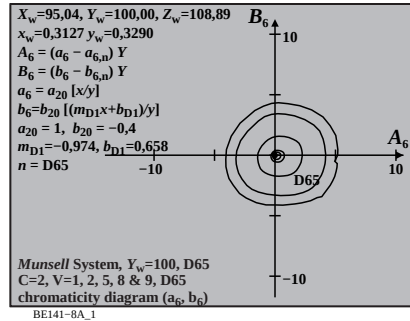

BE141−8A_1